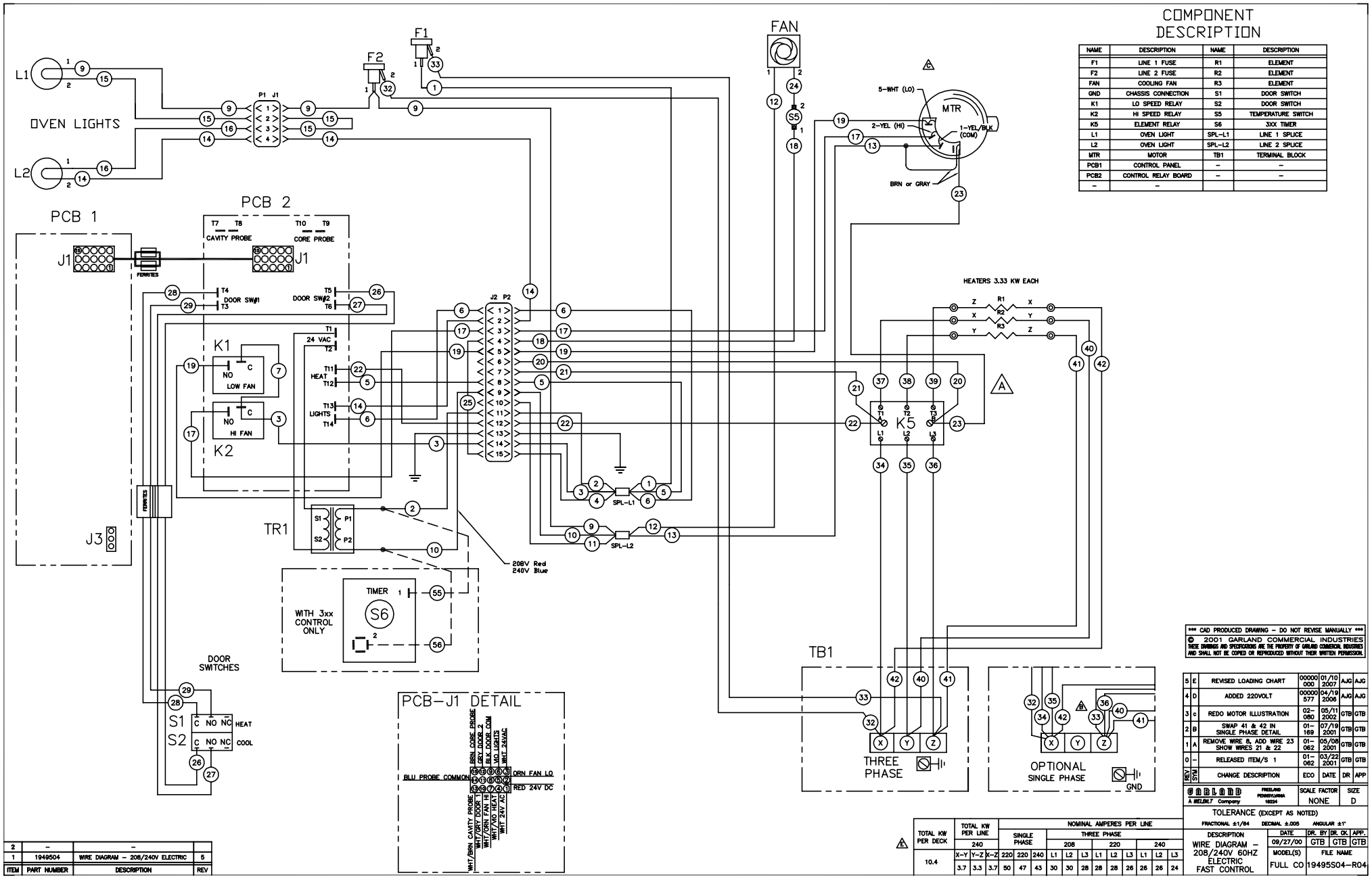

COMPONENT DESCRIPTION

NAME	DESCRIPTION	NAME	DESCRIPTION
F1	LINE 1 FUSE	R1	ELEMENT
F2	LINE 2 FUSE	R2	ELEMENT
FAN	COOLING FAN	R3	ELEMENT
GND	CHASSIS CONNECTION	S1	DOOR SWITCH
K1	LO SPEED RELAY	S2	DOOR SWITCH
K2	HI SPEED RELAY	S5	TEMPERATURE SWITCH
K5	ELEMENT RELAY	S6	3XX TIMER
L1	OVEN LIGHT	SPL-L1	LINE 1 SPLICE
L2	OVEN LIGHT	SPL-L2	LINE 2 SPLICE
MTR	MOTOR	TB1	TERMINAL BLOCK
PCB1	CONTROL PANEL	–	–
PCB2	CONTROL RELAY BOARD	–	–
–	–		

ITEM	PART NUMBER	DESCRIPTION	REV
2	–	–	
1	1949504	WIRE DIAGRAM – 208/240V ELECTRIC	5

TOTAL KW PER DECK	TOTAL KW PER LINE			NOMINAL AMPERES PER LINE											
	240			SINGLE PHASE			THREE PHASE								
							208			220			240		
	X–Y	Y–Z	X–Z	220	220	240	L1	L2	L3	L1	L2	L3	L1	L2	L3
10.4	3.7	3.3	3.7	50	47	43	30	30	28	28	28	26	26	26	24

*** CAD PRODUCED DRAWING – DO NOT REVISE MANUALLY ***
© 2001 GARLAND COMMERCIAL INDUSTRIES
THESE DRAWINGS AND SPECIFICATIONS ARE THE PROPERTY OF GARLAND COMMERCIAL INDUSTRIES AND SHALL NOT BE COPIED OR REPRODUCED WITHOUT THEIR WRITTEN PERMISSION.

REV	STYLE	CHANGE DESCRIPTION	ECO	DATE	DR	APP
5	E	REVISED LOADING CHART	00000 000	01/10 2007	AJG	AJG
4	D	ADDED 220VOLT	00000 577	04/19 2006	AJG	AJG
3	C	REDO MOTOR ILLUSTRATION	02–080	05/11 2002	GTB	GTB
2	B	SWAP 41 & 42 IN SINGLE PHASE DETAIL	01–169	07/19 2001	GTB	GTB
1	A	REMOVE WIRE 8, ADD WIRE 23 SHOW WIRES 21 & 22	01–062	05/08 2001	GTB	GTB
0	–	RELEASED ITEM/S 1	01–062	03/22 2001	GTB	GTB

GARLAND
A WELBILT Company
FREELAND PENNSYLVANIA 18224

SCALE FACTOR: NONE
SIZE: D

TOLERANCE (EXCEPT AS NOTED)
FRACTIONAL ±1/64 DECIMAL ±.005 ANGULAR ±1°

DESCRIPTION	DATE	DR. BY	DR. CK.	APP.
WIRE DIAGRAM – 208/240V 60HZ ELECTRIC FAST CONTROL	09/27/00	GTB	GTB	GTB
MODEL(S) FULL CO	FILE NAME 19495S04–R04			