Linkage Details for the Counter Char-Broiler Adjustable Racks (GX-Regal)

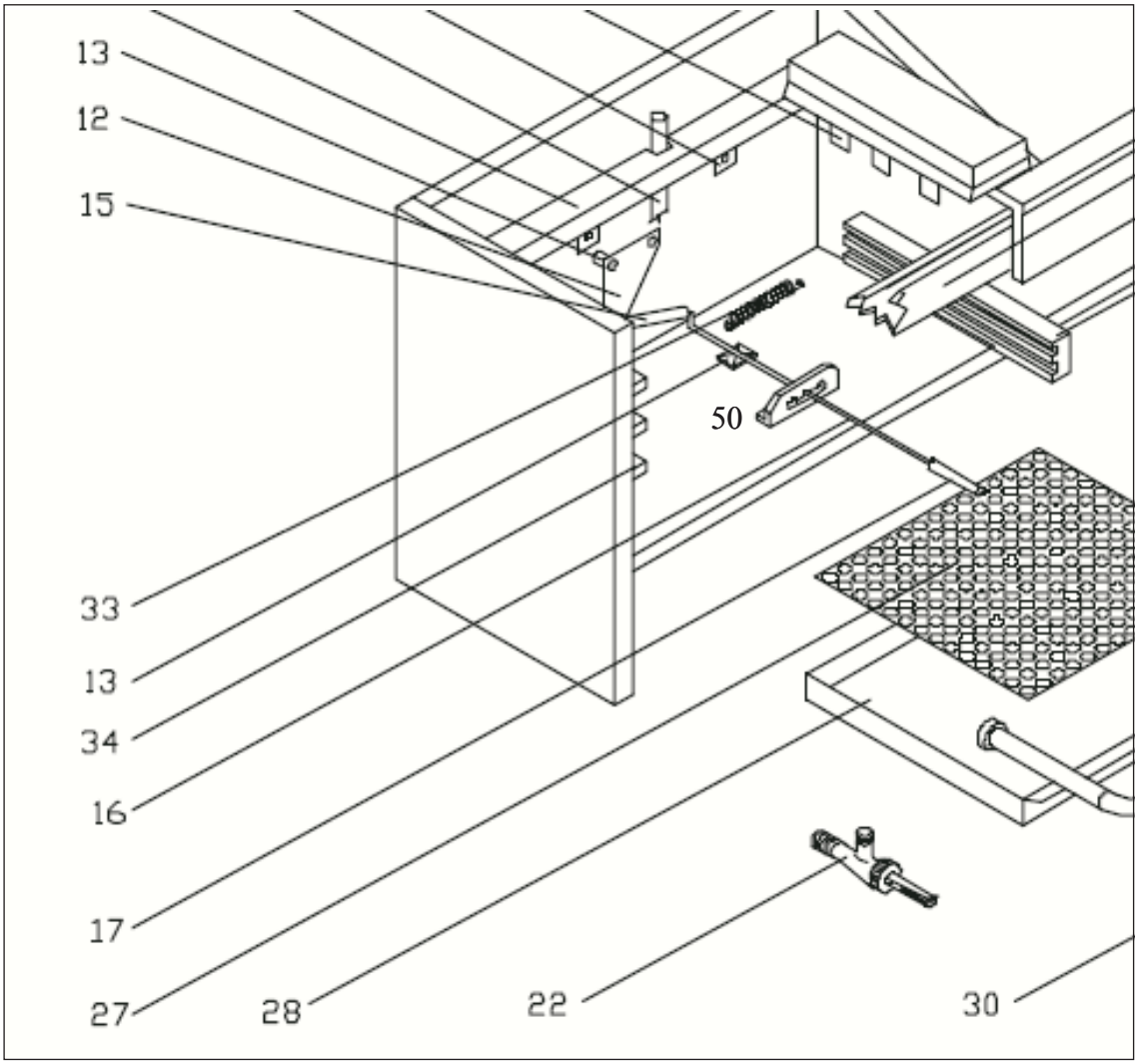

13- Pivot (2) 151877
12- Lift Plate 153834
(Washers for Pivots 800310)
15- Drag Link 153835
16- Rod 153831
17- Handle 151696
33- Spring 151699
(S-Hook-22500 and Bracket-154108)
50- Rod Catch Bracket 153836