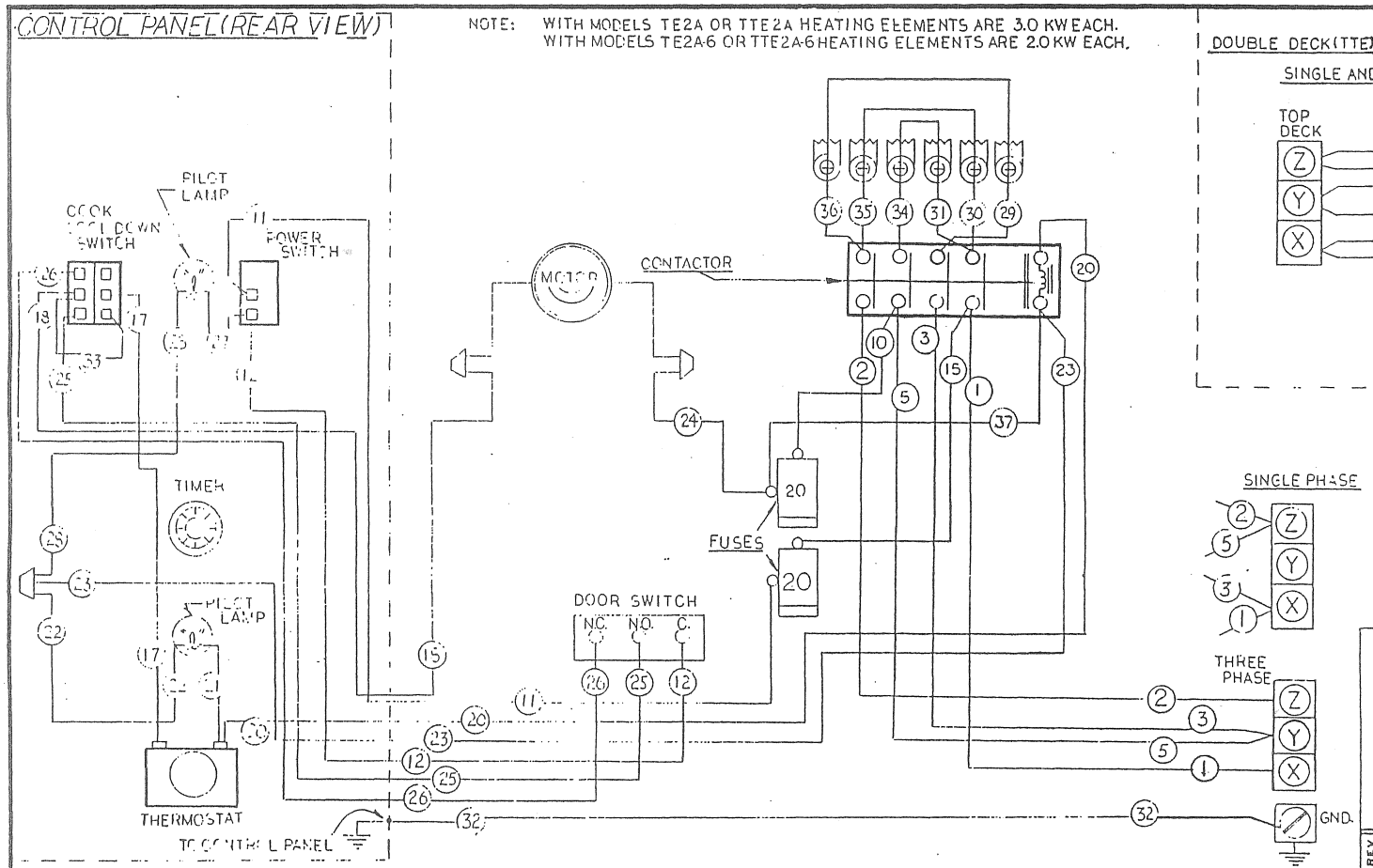

ITEM	PART NUMBER	PART NAME	MATERIAL	BLANK SIZE	FINISH
	12709CC	WIRING DIAGRAM			

MODEL	TOTAL KW	THREE PHASE KW/PHASE 208 240 XY	YZ	XZ	NOMINAL AMPERES PER LINE SINGLE PHASE 208	240	THREE PHASE 208 X	Y	Z	240 X	Y	Z
TE2A	9.2	3.2	3	3	44	38	26	26	25	23	23	22
TTE2A	18.4	6.4	6	6	88	77	52	52	50	45	45	44
TE2A-6	6.2	2.2	2	2	30	26	18	18	17	15	15	15
TTE2A-6	12.4	4.4	4	4	60	52	35	35	34	31	31	29

REV	SYM	DESCRIPTION	DATE	APP

TOLERANCES (EXCEPT AS NOTED)
FRACTIONAL ± 1/64 DECIMAL ± .005

SCALE

GARLAND COMMERCIAL INDUSTRIES, INC.
FREELAND PENNSYLVANIA 18224

GCI-E002 A

DWG SIZE B

TITLE:
CONVECTION OVEN
HALF SIZE, ELECTRIC
MODEL NO'S
TE2A, TTE2A
TE2A-6, TTE2A-6
208/240 VOLT 60HZ

DO NOT SCALE

DATE	DRWN	APP.
10.17.83	G	

DRAWING NO. 12709

REV

SHEET OF