Full Size MCO Fastron Control Wiring Harness Guide

GAS:

200
300
400
2000 (Arby's)

ELECTRIC:

200
300
400
2000 (Arby's)

GAS 200

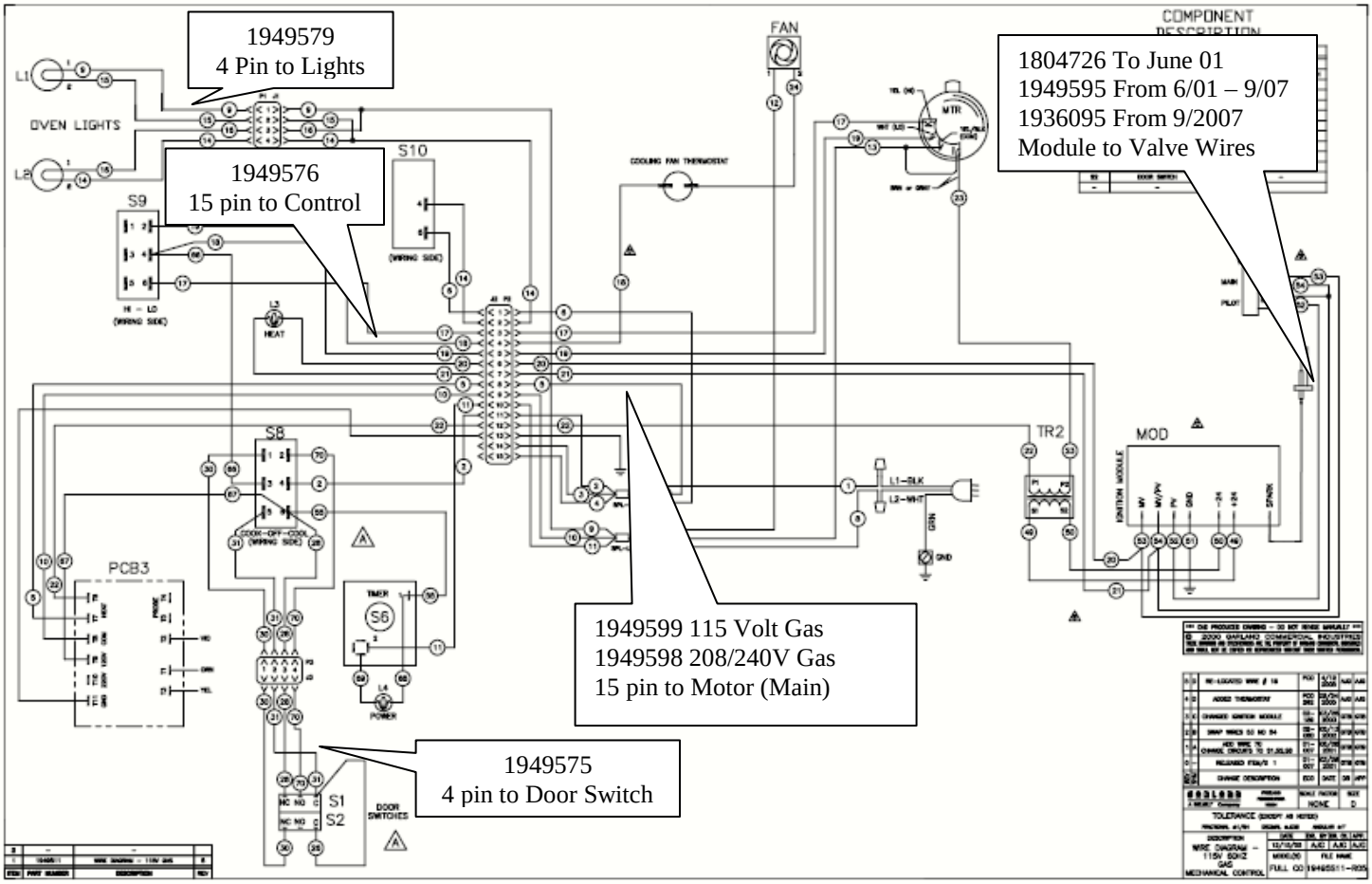
1949579
4 Pin to Lights
1949576
15 pin to Control
1804726 To June 01
1949595 From 6/01 – 9/07
1936095 From 9/2007
Module to Valve Wires
1949599 115 Volt Gas
1949598 208/240V Gas
15 pin to Motor (Main)
1949575
4 pin to Door Switch
OVEN LIGHTS
FAN
MTR
S10
S9
S8
PCB3
S6
S1
S2
TR2
MOD
COMPONENT DESCRIPTION

Gas 300

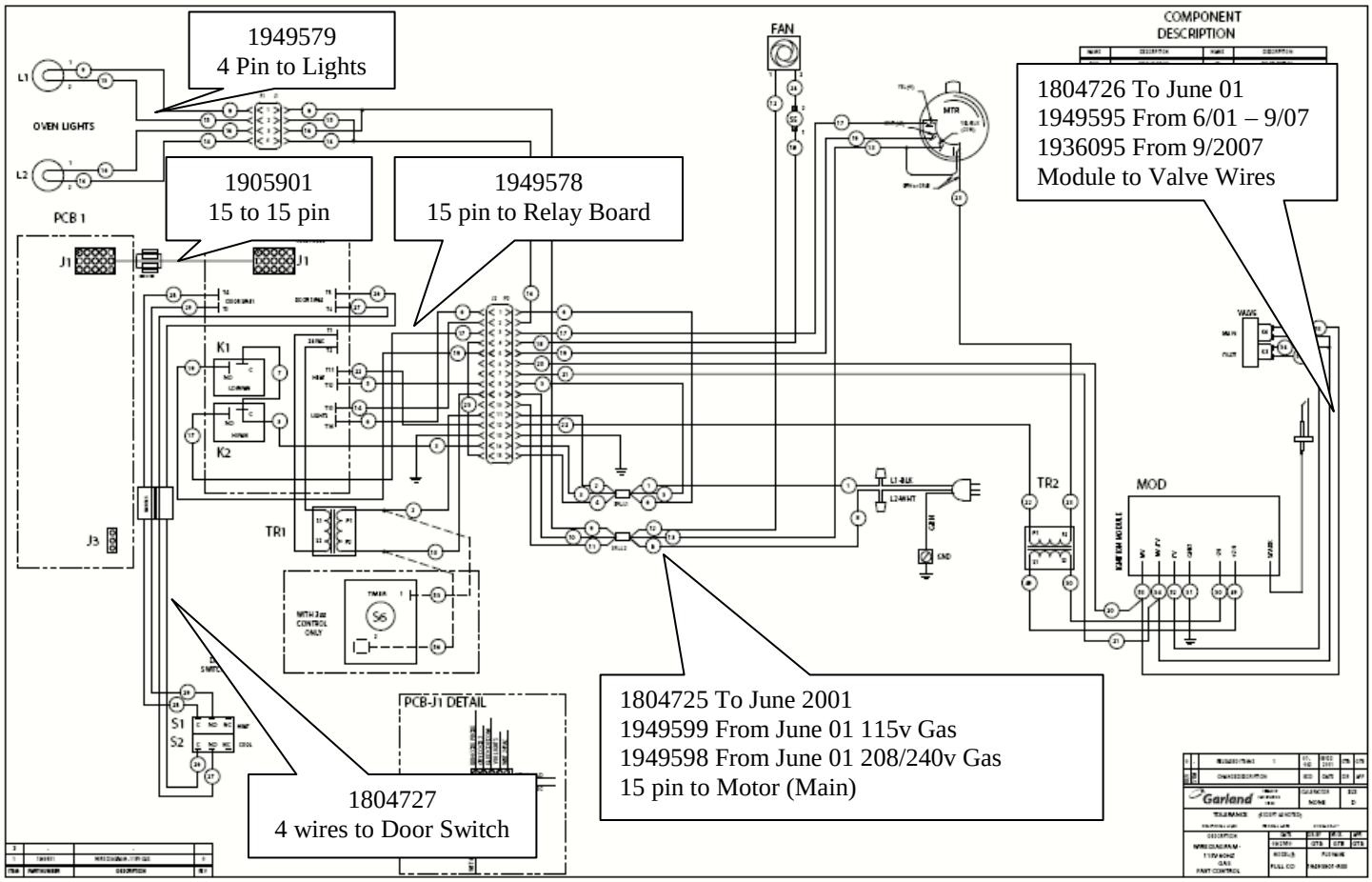
1949579
4 Pin to Lights
1905901
15 to 15 pin
1949578
15 pin to Relay Board
1804726 To June 01
1949595 From 6/01 – 9/07
1936095 From 9/2007
Module to Valve Wires
1804725 To June 2001
1949599 From June 01 115v Gas
1949598 From June 01 208/240v Gas
15 pin to Motor (Main)
1804727
4 wires to Door Switch
COMPONENT DESCRIPTION
FAN
OVEN LIGHTS
PCB 1
J1
J3
K1
K2
TR1
TR2
MOD
PCB-J1 DETAIL
S1
S2
S6
Garland

Gas 400

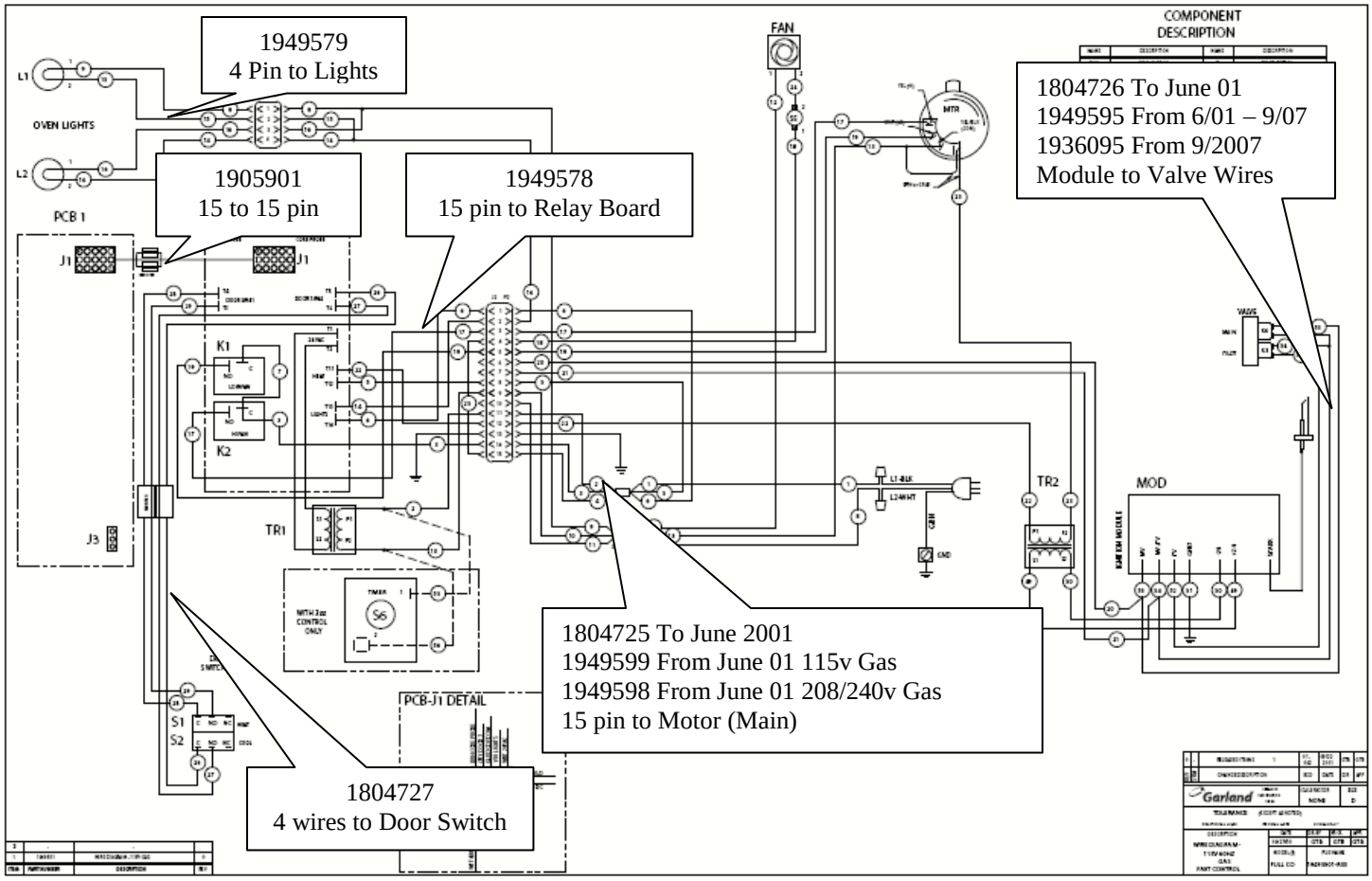
1949579
4 Pin to Lights
1905901
15 to 15 pin
1949578
15 pin to Relay Board
1804726 To June 01
1949595 From 6/01 – 9/07
1936095 From 9/2007
Module to Valve Wires
1804725 To June 2001
1949599 From June 01 115v Gas
1949598 From June 01 208/240v Gas
15 pin to Motor (Main)
1804727
4 wires to Door Switch
COMPONENT DESCRIPTION
FAN
OVEN LIGHTS
PCB 1
J1
J3
K1
K2
TR1
TR2
MOD
VALVE
PCB-J1 DETAIL
S1
S2
S6
Garland

Gas 2000

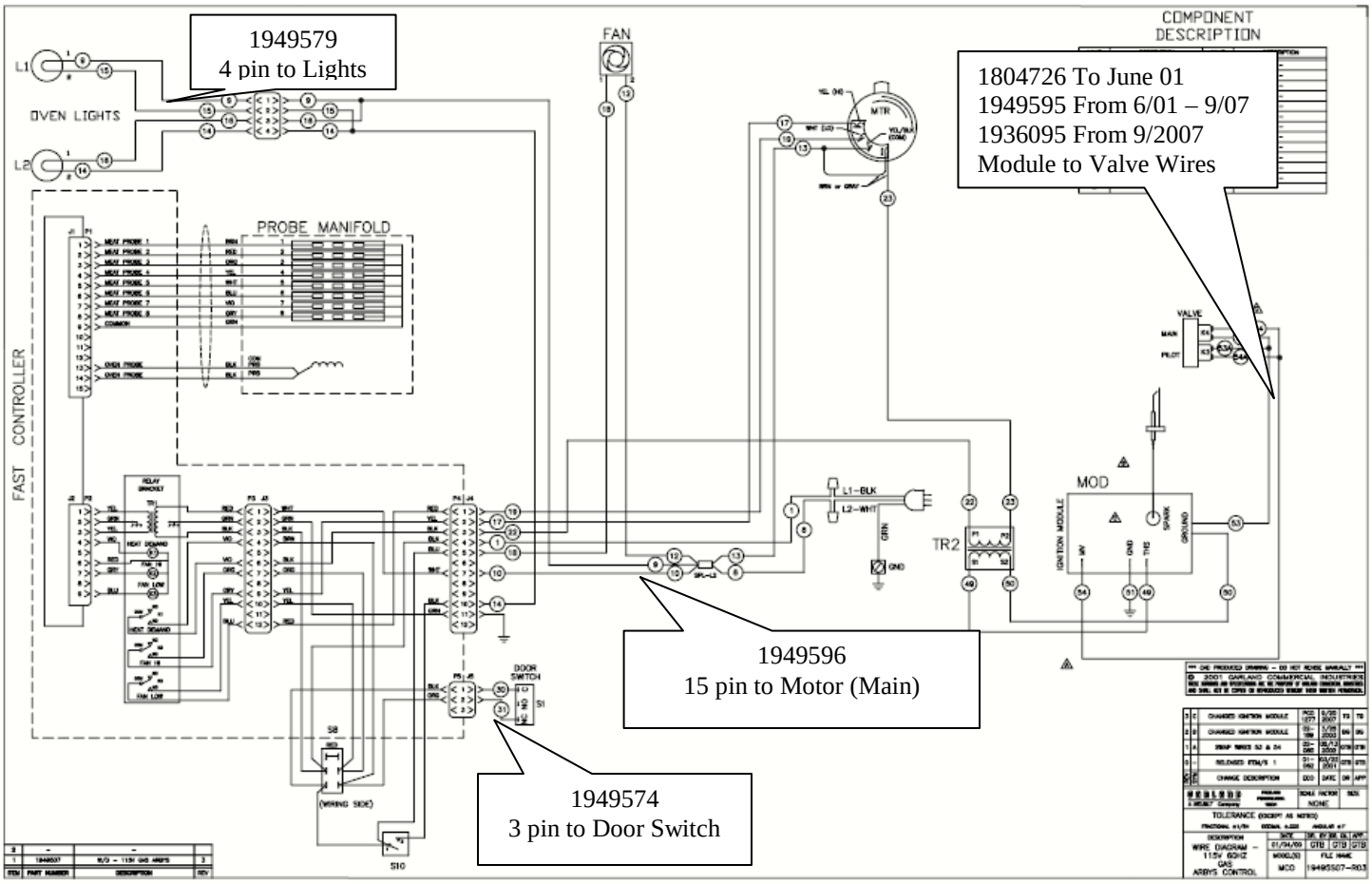
1949579
4 pin to Lights
1804726 To June 01
1949595 From 6/01 – 9/07
1936095 From 9/2007
Module to Valve Wires
1949596
15 pin to Motor (Main)
1949574
3 pin to Door Switch
FAST CONTROLLER
OVEN LIGHTS
PROBE MANIFOLD
FAN
MTR
VALVE
MOD
TR2
DOOR SWITCH
COMPONENT DESCRIPTION

Electric 200

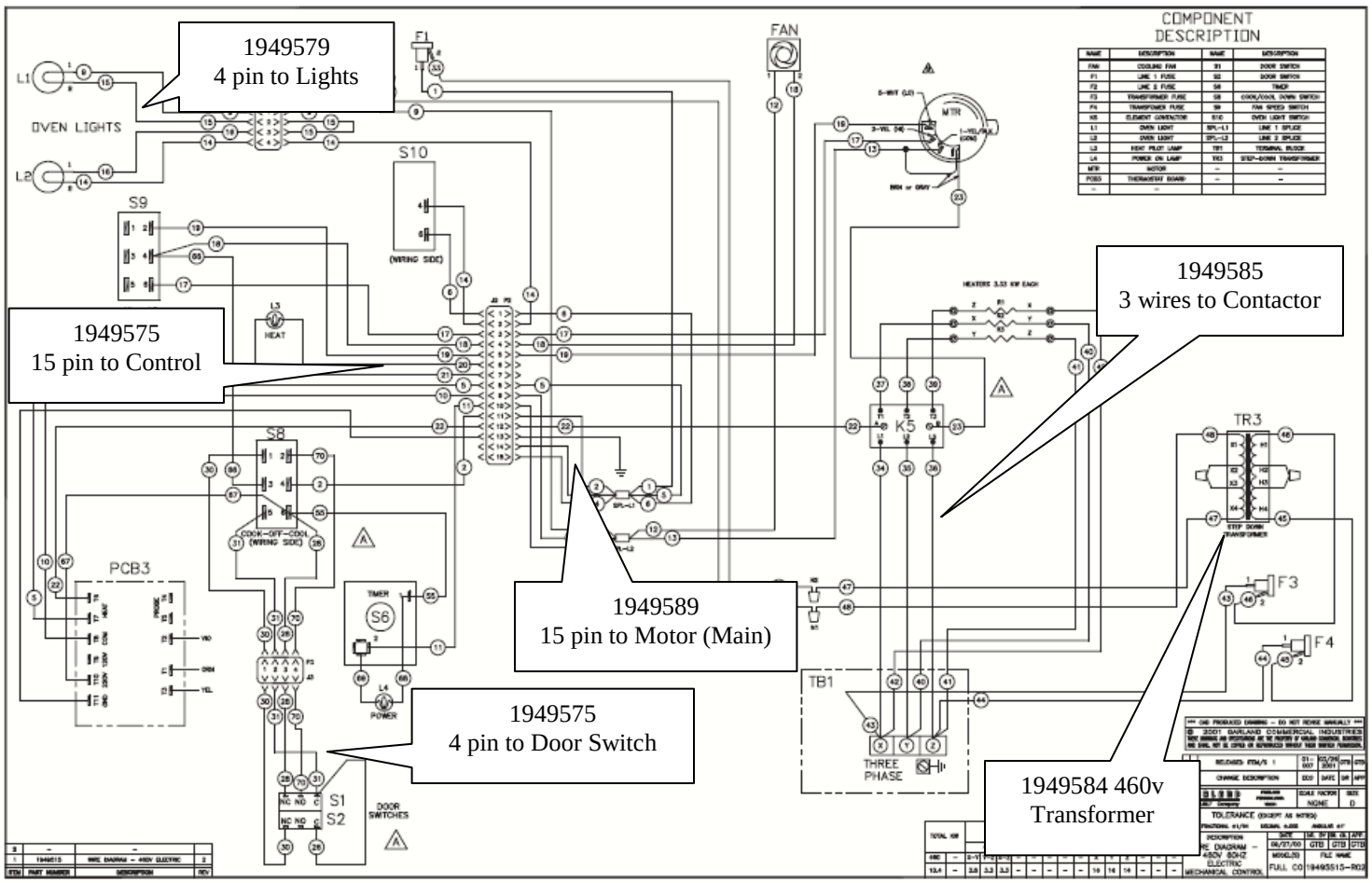

Electric 300

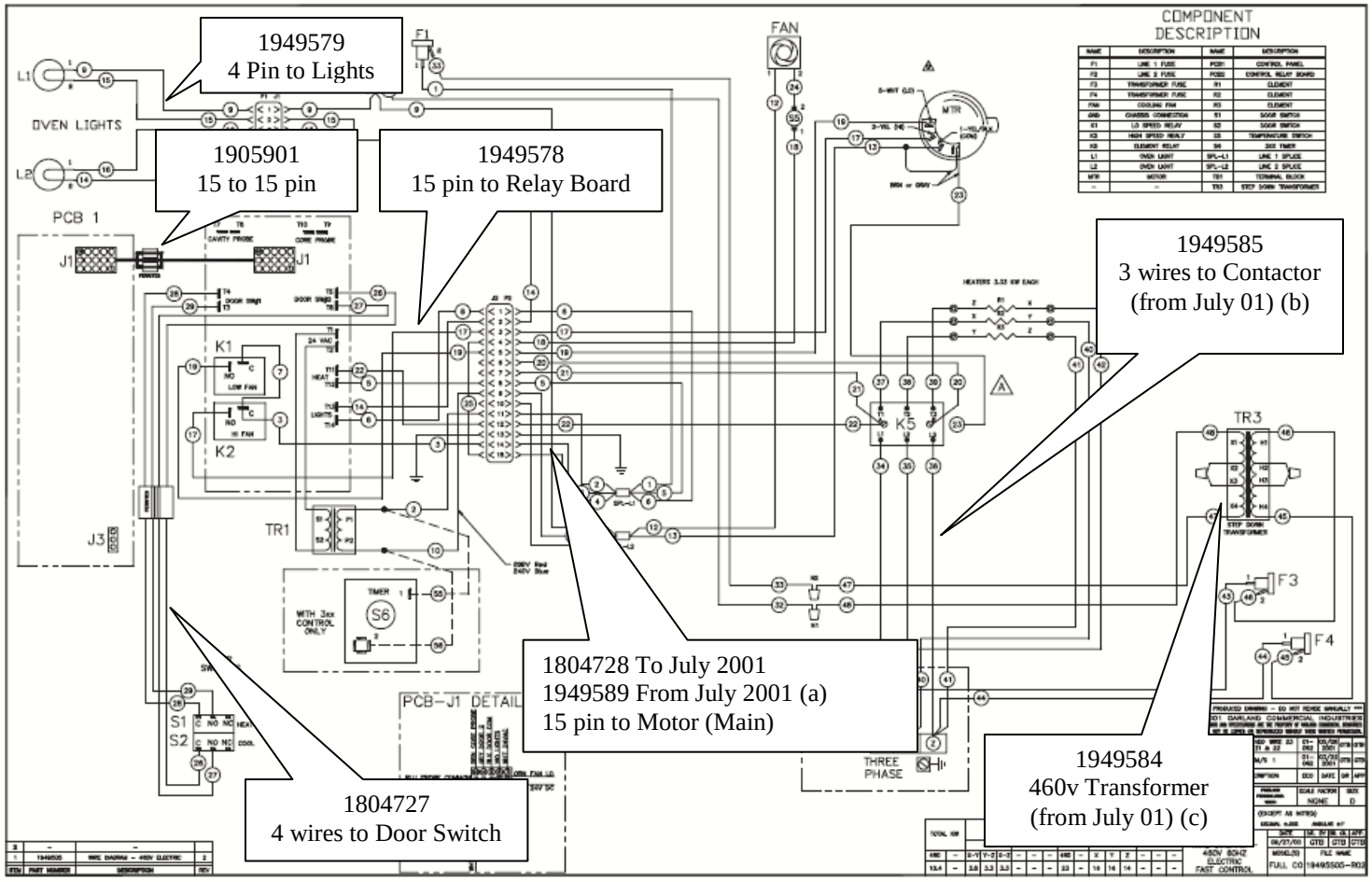

Electric 400

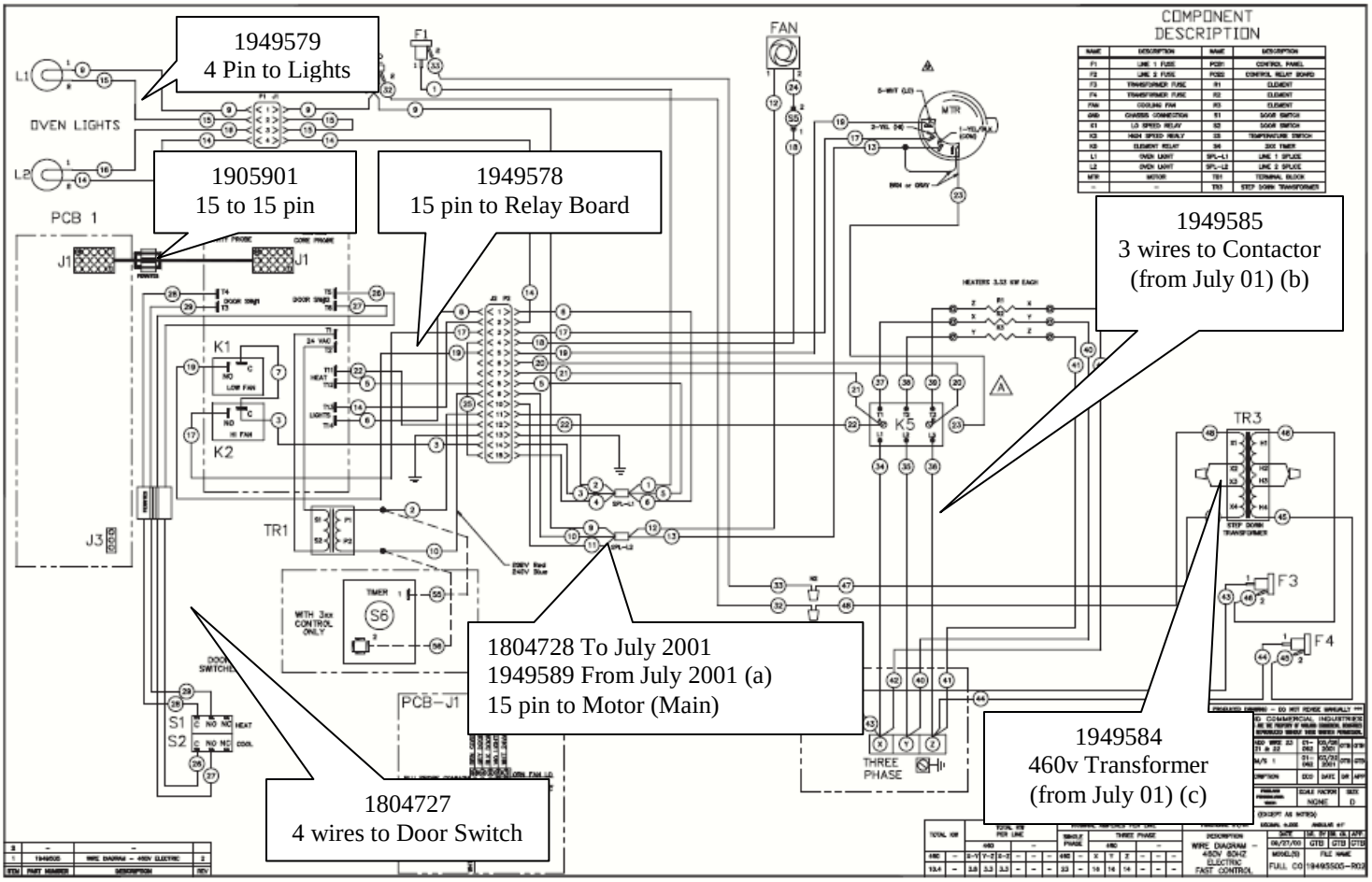
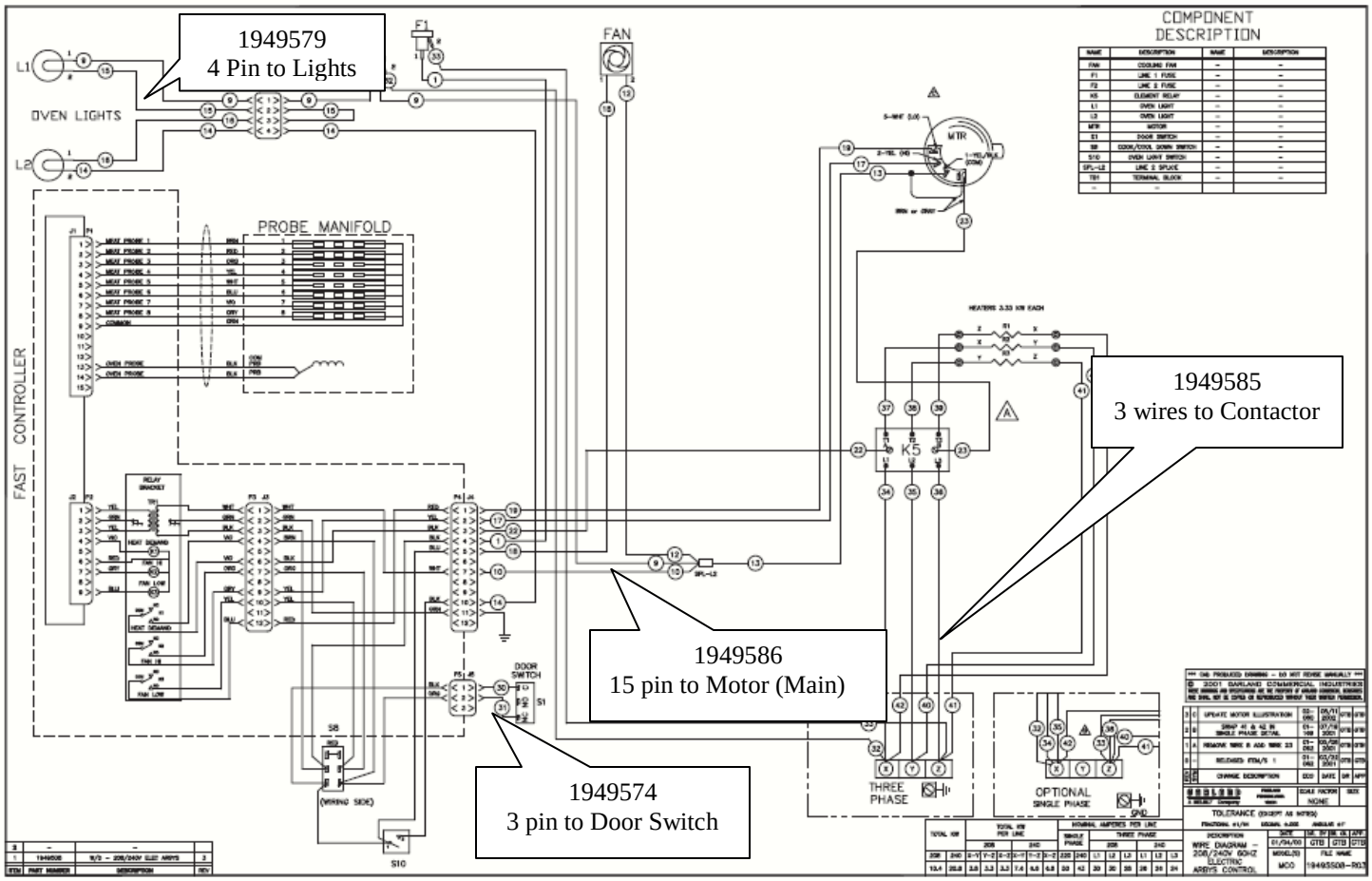
Electric 2000